R Series Sprinkler Conversion Assembly
Installation and Adjustment Guide

Introduction

The Toro R Series sprinkler conversion assemblies provide a convenient, cost-effective method of upgrading existing Rain Bird® Eagle™ 900 and 1100 Series sprinklers to industry-leading Toro irrigation technology.

Benefits include:

- Simple, flexible TruJectory™ spray height adjustment
- 1½" (38mm) increase in pop-up height
- Adjustable 40°–330° part-circle and true 360° full circle rotation in one sprinkler (855RB/DT55RB series)
- Ratcheting riser and arc adjustment band for easy, accurate watering pattern definition.

Installation Procedure

⚠ WARNING: Prior to performing any service procedure on a large-turf irrigation system, ensure the controller and water supply are shut off and secured to prevent inadvertent operation. When manually operating the sprinkler pilot valve, never stand or lean over the top of the sprinkler. When performing arc/spray adjustment procedures during operation, never come in full contact with spray. Failure to comply can result in serious injury.

Figure 1

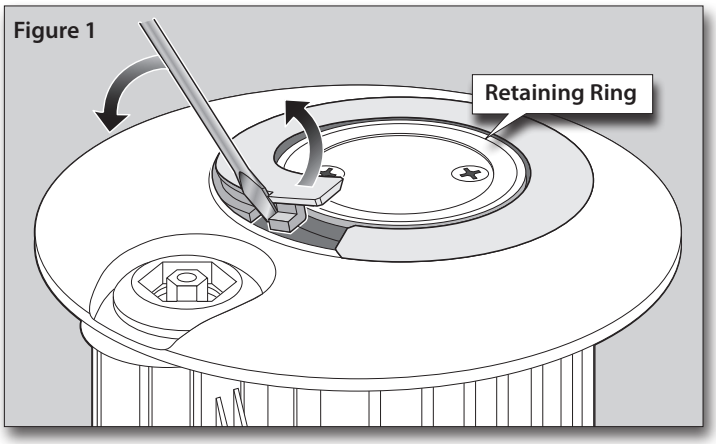

1. Insert a small screwdriver blade through the slot provided in the sprinkler assembly retaining ring. Pry the end of the ring out of the body, then work the blade around the retainer to remove.

Figure 2

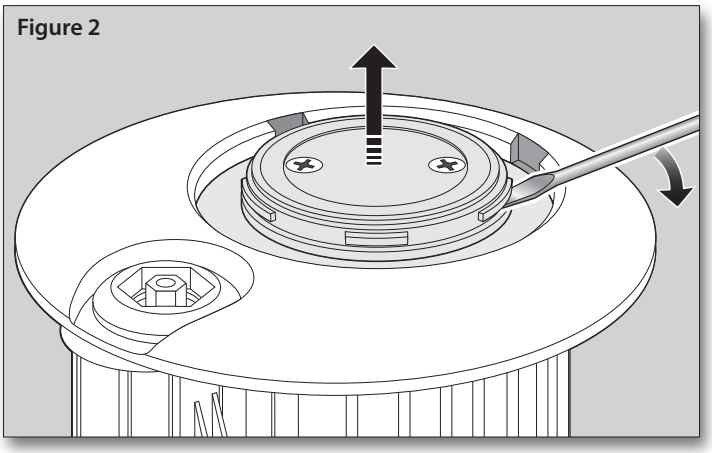

2. Pry the sprinkler assembly up and out of the body.

Figure 3

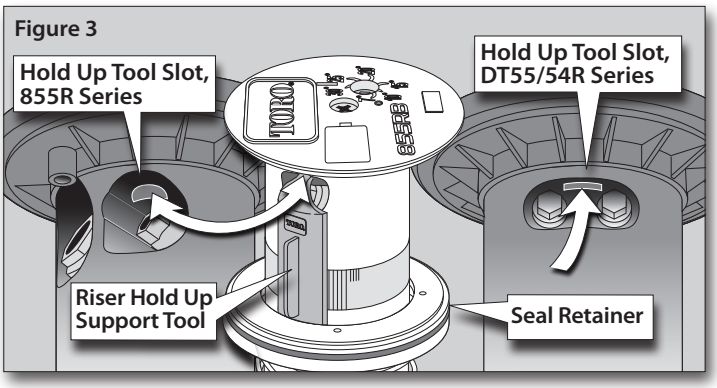

3. Ensure the conversion assembly is prepared for installation with the riser hold up tool inserted as shown in **Figure 3**.

Figure 4

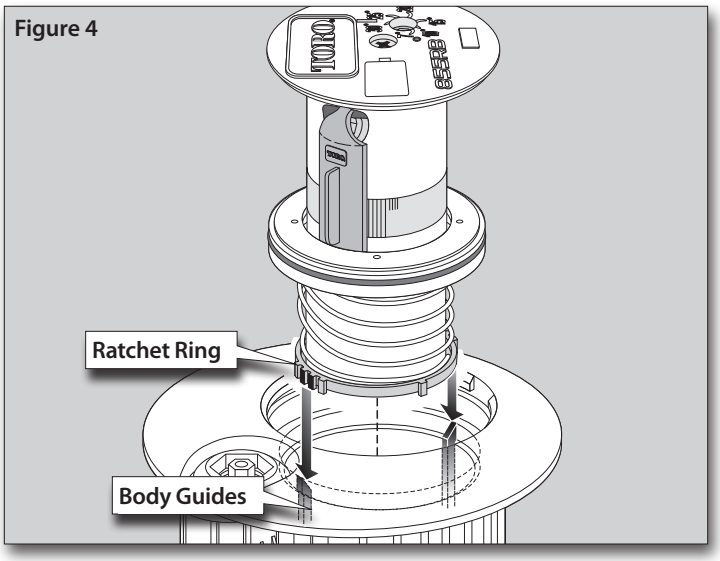

4. Insert the conversion assembly into the body ensuring the ratchet ring is properly keyed to the body guides.

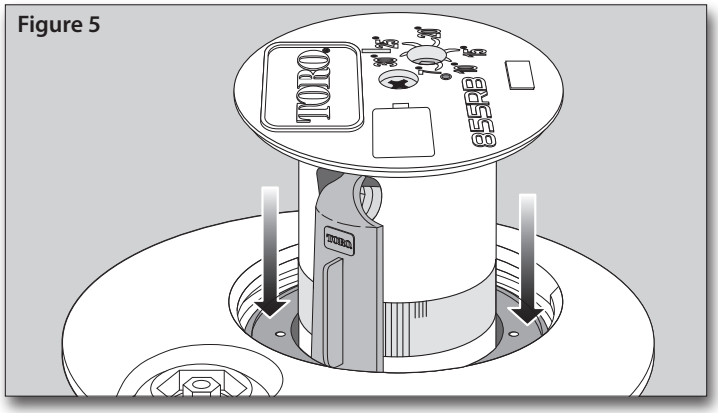

Figure 5

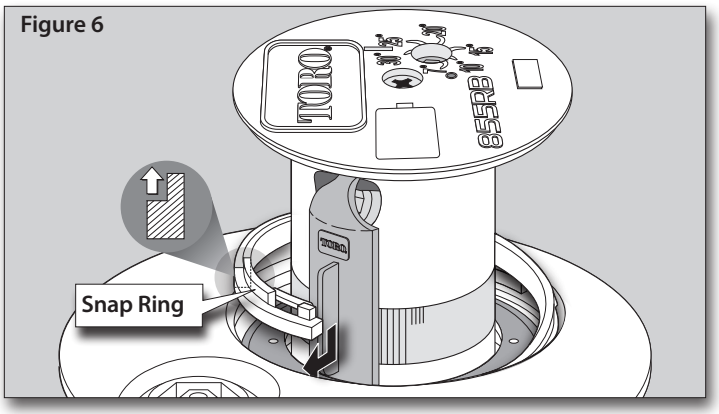

Figure 6

5. Press the seal retainer into the body until it bottoms out – just below the bottom of the snap ring groove. See **Figure 5**.
6. Fit the snap ring onto the riser assembly, orienting the stepped side facing up (as shown in the cross section in **Figure 6**).
7. Insert either end of the snap ring into the groove just above the seal retainer. Continue working the ring into the groove until it is fully seated and flush against the seal retainer.

   Note: *When properly installed, the snap ring end gap will measure approximately 1/2" (13 mm).*

855RB and DT55RB Series Arc Pattern Adjustment

The left side of the sprinkler's part-circle arc pattern is non-adjustable, requiring all arc pattern adjustments to be made on the right side of the pattern. Adaptive arc adjustment enables the pattern to be set in 5° increments, ranging from 40° minimum, to 330° maximum. Standard part-circle arc settings for 1/4, 1/2, 3/4, and continuous full-circle rotation are indicated on the riser assembly, enabling the watering pattern to be easily set prior to installation.

Note: *The 855RB and DT55RB sprinkler conversion assembly arc pattern is factory-set to 180° (1/2 circle).*

Adaptive Arc Adjustment – 40° to 330°

1. Insert the end of the Multipurpose Tool (#995-83) into the slot provided in the top of the cap. Hook the inner edge of the cap to pull the riser assembly up. Grasp the riser assembly firmly below the arc adjustment band to prevent retraction. See **Figure 7**.
2. Slowly rotate the nozzle turret back and forth to locate the current left and right travel limits. Leave the nozzle turret rotated to the left travel limit. See **Figure 8**.
3. Align the nozzle turret with the left watering border by rotating the ratcheting riser assembly in either direction. See **Figure 9**.

   ⚠ **Caution: Never attempt to turn the ratcheting riser assembly during operation. Forcing the riser assembly to turn can result in severe sprinkler damage.**
4. Rotate the nozzle turret clockwise to the right travel limit. See **Figure 10**.
5. Squeeze and hold the arc adjust band at the ribbed section. Rotate the nozzle turret in either direction to the desired right limit, then release pressure on adjustment band. See **Figure 11**.
6. Slowly rotate the nozzle turret back and forth to check the adjusted arc pattern.
7. Check the arc pattern again during sprinkler operation. Fine tune the arc as needed to achieve the optimum watering pattern.

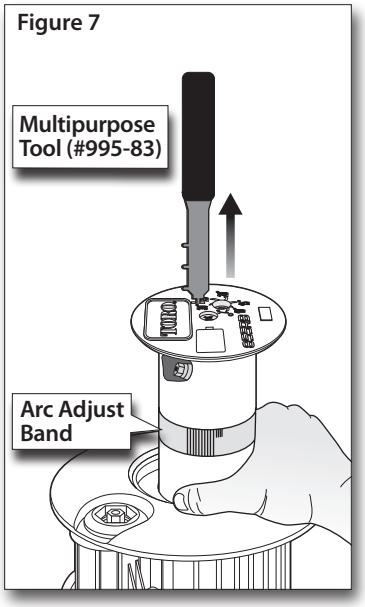

Figure 7

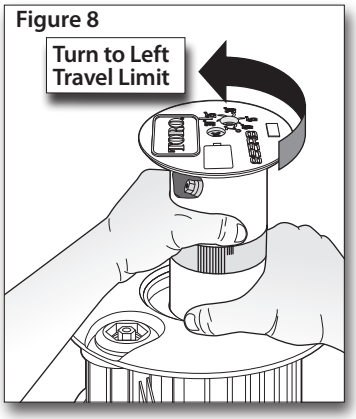

Figure 8

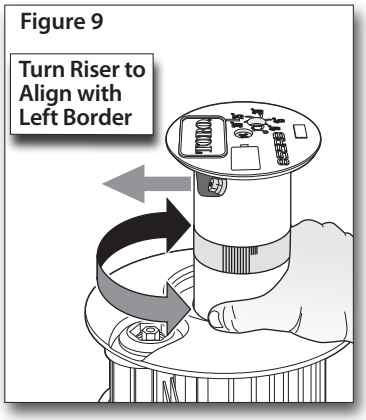

Figure 9

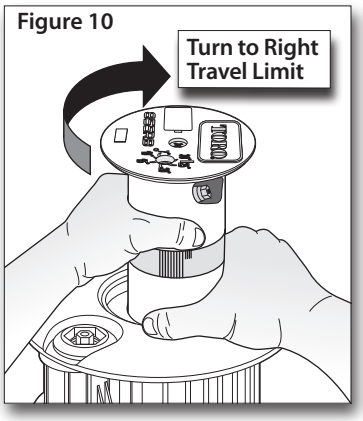

Figure 10

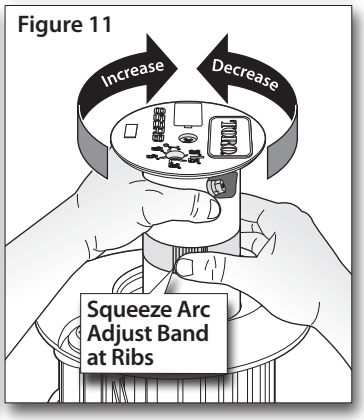

Figure 11

Standard Arc and Full Circle Adjustment

The arc adjustment band is marked for 1/4, 1/2, 3/4 and full-circle settings.

1. Squeeze the ribbed area of the arc adjustment band (see **Figure 11**), then rotate the band to align the desired indicator with the arrow indicator on the side of the nozzle turret (directly below the back nozzle). See **Figure 12**.

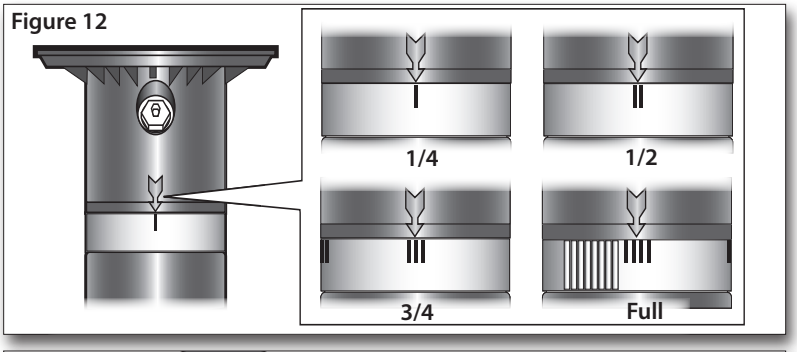

Figure 12

Main Nozzle Trajectory Adjustment

Main nozzle spray trajectory can be easily adjusted up or down to help compensate for difficult watering conditions, such as mounded turf or low overhead obstructions.

The default trajectory setting is 25°. The 855RB sprinkler series has an adjustment range of 7° to 30°, and is accessed through the top of the cap, either wet or dry. The DT55/54RB series sprinklers provide a 15° or 25° trajectory angle, and are adjusted dry with the sprinkler cap removed.

Note: *Spray radius will decrease proportionally when decreasing the trajectory angle.*

For DT55/54RB series: *A #2 Phillips screwdriver and a 5/8" nut driver (p/n 995-83) are required for this procedure.*

1. Remove the cap screw and cap.
2. Rotate the main nozzle assembly clockwise to orient the indicator tab to the 15° or 25° trajectory position as shown in **Figure 13**.
3. Reinstall the cap.

For 855RB series: A 5/16" nut driver (p/n 995-105) is required for this procedure .

1. Turn the trajectory adjustor left to increase, or right to decrease angle. See **Figure 13**.

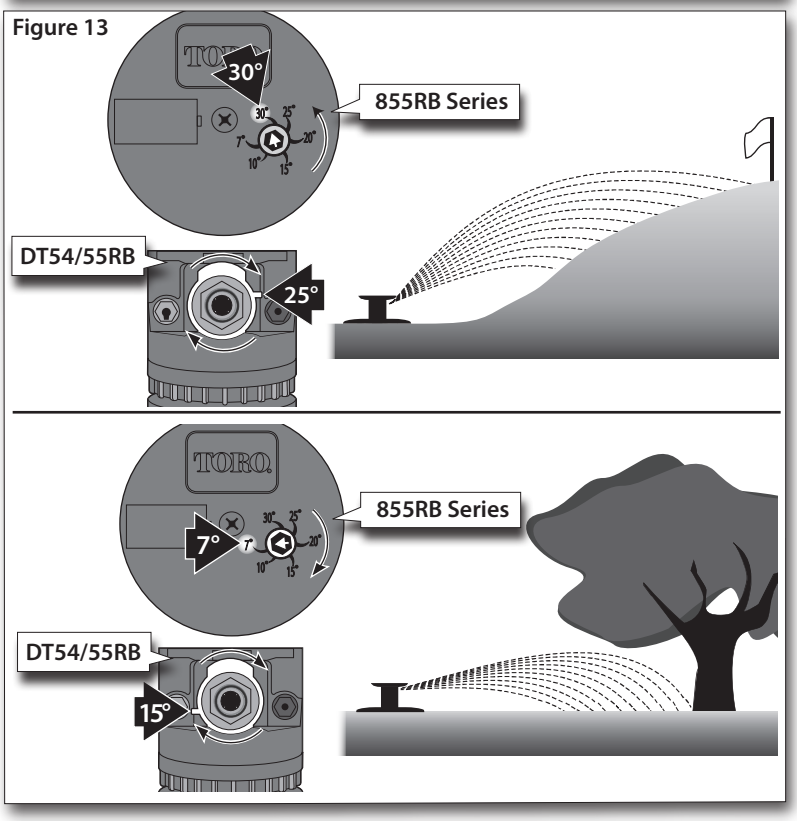

Figure 13

Main Nozzle Diffusion Adjustment (optional)

A 3/32" hex driver (P/N 995-82) is required for this procedure.

1. Move the diffusion screw from its storage position next to the cap screw, to the pilot hole in front of the main nozzle.
2. With the sprinkler operating, adjust the screw depth for the preferred amount of spray diffusion.

Caution: *The diffusion screw can be lost in the nozzle stream if over-adjusted.*

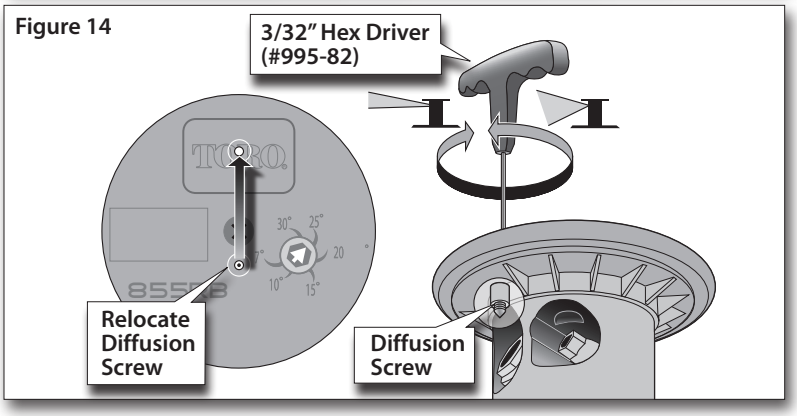

Figure 14

Cap Marker Installation

The lavender-color cap insert (provided), or optional yardage markers are easily installed in place of the blank insert. A small slotted screwdriver and diagonal cutters are required for this procedure.

1. Insert the screwdriver tip under the inside edge of the blank cap and pry upward to remove..
2. Press the inserts into place, flush with the cap.
3. Trim off the two outer insert tabs, flush with the bottom of the cap.

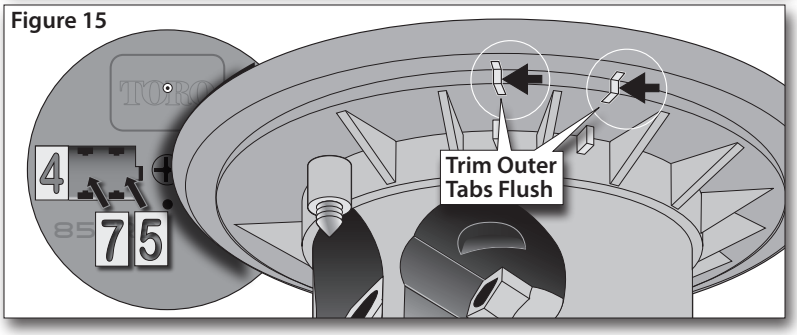

Figure 15

Front Nozzle Performance Charts

855RB-5154 Performance Chart

Front Nozzle Positions	Nozzle Set 51 (Yellow)		Nozzle Set 52 (Blue)		Nozzle Set 53 (Brown)		Nozzle Set 54 (Orange)	
	102-4587		102-4588		102-4589		102-0728	
	Blue	Gray	Red	Gray	Orange	Gray	Orange	Gray
	102-2925	102-2910	102-2928	102-2910	102-2926	102-2910	102-2926	102-2910
Back Nozzle Positions	Red Plug		Red Plug		Red Plug		Red Plug	
	102-4335		102-4335		102-4335		102-4335	
PSI	rad/ft	gpm	rad/ft	gpm	rad/ft	gpm	rad/ft	gpm
60	55	16.1	63	20.3	69	23.4	75	31.3
70	56	17.4	66	21.8	70	25.3	76	33.8
80	57	18.5	68	23.3	72	27.0	77	36.0
90	58	19.4	70	24.5	75	28.5	79	38.1
100	59	20.5	72	25.9	76	30.0	80	40.2
Stator	102-1939 Yellow							
Conver.	855RB-5154							

855RB-5558 Performance Chart

Front Nozzle Positions	Nozzle Set 55 (Green)		Nozzle Set 56 (Gray)		Nozzle Set 57 (Black)		Nozzle Set 58 (Red)	
	102-0729		102-0730		102-4261		102-4260	
	Blue	Gray	Blue	Gray	Orange	Gray	Blue	Gray
	102-2925	102-2910	102-2925	102-2910	102-2926	102-2910	102-2925	102-2910
Back Nozzle Positions	Red Plug		Red Plug		Red Plug		Red Plug	
	102-4335		102-4335		102-4335		102-4335	
PSI	rad/ft	gpm	rad/ft	gpm	rad/ft	gpm	rad/ft	gpm
60	—	—	—	—	—	—	—	—
70	—	—	—	—	—	—	—	—
80	80	39.1	85	41.0	88	45.4	92	49.7
90	83	41.5	87	43.5	91	48.2	94	52.8
100	86	43.7	90	45.7	94	50.6	96	55.3
Stator	102-1940 White							
Conver.	855RB-5558							

DT55RB-5154 Performance Chart

Front Nozzle Positions	Nozzle Set 51 (Yellow)		Nozzle Set 52 (Blue)		Nozzle Set 53 (Brown)		Nozzle Set 54 (Orange)	
	102-6906		102-0726		102-6907		102-0728	
	Yellow	Brown	Yellow	Yellow	Yellow	Yellow	Yellow	Yellow
	102-5670	102-5671	102-5670	102-6884	102-5670	102-6884	102-5670	102-6884
Back Nozzle Positions	Red Plug	Red Plug	Red Plug	Red Plug	Red Plug	Red Plug	Red Plug	Red Plug
	102-4335	102-4335	102-4335	102-4335	102-4335	102-4335	102-4335	102-4335
PSI	rad/ft	gpm	rad/ft	gpm	rad/ft	gpm	rad/ft	gpm
60	56	15.2	57	20.1	66	24.3	68	28.0
70	58	16.5	60	21.7	67	26.2	71	30.4
80	59	17.5	62	23.1	68	27.8	72	31.7
90	60	18.4	64	24.5	71	28.8	74	34.5
100	61	19.3	66	25.3	72	30.3	75	36.5
Stator	102-1939 Yellow							
Conver.	DT55RB-5154							

DT55RB-5558 Performance Chart

Front Nozzle Positions	Nozzle Set 55 (Green)		Nozzle Set 56 (Gray)		5Nozzle Set 57 (Black)		Nozzle Set 58 (Red)	
	102-6955		102-6935		102-6936		102-6909	
	Yellow	Green	Green	Green	Green	Green	Green	Green
	102-5670	102-6885	102-6531	102-6885	102-6531	102-6885	102-6531	102-6885
Back Nozzle Positions	Red Plug	Red Plug	Red Plug	Red Plug	Red Plug	Red Plug	Red Plug	Red Plug
	102-4335	102-4335	102-4335	102-4335	102-4335	102-4335	102-4335	102-4335
PSI	rad/ft	gpm	rad/ft	gpm	rad/ft	gpm	rad/ft	gpm
60	—	—	—	—	—	—	—	—
70	—	—	—	—	—	—	—	—
80	76	39.7	80	43.1	83	48.2	85	53.0
90	78	43.1	81	45.1	86	51.2	87	56.0
100	80	45.5	82	49.0	90	54.5	89	59.0
Stator	102-1940 White							
Conver.	DT55RB-5558							

DT54RB-5154 Performance Chart

Front Nozzle Positions	Nozzle Set 51 (Yellow)		Nozzle Set 52 (Blue)		Nozzle Set 53 (Brown)		Nozzle Set 54 (Orange)	
	102-0725		102-7001		102-0727		102-7002	
	Red Plug	Red Plug	Red Plug	Red Plug	Red Plug	Red Plug	Red Plug	Red Plug
	102-4335	102-4335	102-4335	102-4335	102-4335	102-4335	102-4335	102-4335
Back Nozzle Positions	Yellow	Blue	Yellow	Orange	Yellow	Red	Yellow	Beige
	102-6937	102-2925	102-6937	102-2926	102-6937	102-2928	102-6937	102-2929
PSI	rad/ft	gpm	rad/ft	gpm	rad/ft	gpm	rad/ft	gpm
60	59	14.6	62	17.4	68	24.3	71	28.2
70	60	15.7	63	18.8	70	26.3	75	30.6
80	61	16.4	64	20.0	72	27.6	78	32.6
90	62	17.8	66	21.3	74	29.9	80	34.7
100	63	18.1	67	23.6	75	30.4	81	36.7
Stator	102-6929 Blue							
Conver.	DT54RB-5154							

DT54RB-5558 Performance Chart

Front Nozzle Positions	Nozzle Set 55 (Green)		Nozzle Set 56 (Gray)		Nozzle Set 57 (Black)		Nozzle Set 58 (Red)	
	102-6908		102-0730		102-4261		102-4260	
	Red Plug	Red Plug	Red Plug	Red Plug	Red Plug	Brown	Red Plug	Brown
	102-4335	102-4335	102-4335	102-4335	102-4335	102-6883	102-4335	102-6883
Back Nozzle Positions	Yellow	Beige	Yellow	Red	Yellow	Gray	Yellow	Gray
	102-6937	102-2929	102-6937	102-2928	102-6937	102-4965	102-6937	102-4965
PSI	rad/ft	gpm	rad/ft	gpm	rad/ft	gpm	rad/ft	gpm
60	—	—	—	—	—	—	—	—
70	—	—	—	—	—	—	—	—
80	83	39.5	85	42.7	87	45.9	91	50.2
90	85	41.6	88	44.9	90	48.5	93	52.8
100	87	43.7	90	46.8	93	51.2	95	55.4
Stator	102-1940 White							
Conver.	DT54RB-5558							

Not recommended at these pressures. Radius shown in feet.
Toro recommends the use of a 1¼" swing joint at flows over 25-GPM (95-LPM). Sprinkler radius data collected in Toro's zero wind test facility per ASAE standard S398.1.
Actual site conditions must be considered when selecting the appropriate nozzle.

Back Nozzle Performance Charts

Nozzles			65 PSI		80 PSI		
Part #	Description	Color	Radius	GPM	Radius	GPM	Profile
102-6937	Inner Nozzle w/ Yellow Restrictor	Yel/Yel	29	3.7	30	4.1	
102-6531	Inner Nozzle w/ White Restrictor	Grn/Wht	31	4.3	33	4.6	
102-6883	Intermediate Nozzle	Brown	38	2.8	38	2.8	
102-6884	Intermediate Nozzle	Yellow	41	4.1	43	4.5	
102-6885	Intermediate Nozzle	Green	42	5.4	45	6.0	

Nozzles			65 PSI		80 PSI		
Part #	Description	Color	Radius	GPM	Radius	GPM	Profile
102-2925	Intermediate Nozzle	Blue	40	2.8	42	3.2	
102-2926	Intermediate Nozzle	Orange	44	4.3	45	4.8	
102-2927	Intermediate Nozzle	Gray	46	5.1	47	5.4	
102-2928	Intermediate Nozzle	Red	48	6.5	50	7.0	
102-2929	Intermediate Nozzle	Beige	51	8.1	53	9.1	